SLAC-PUB-16074

Engineering Specifications Document for SXRSS Beam Overlap Diagnostics

Document Approval (signature/date)

Name / Title	**Signature**	**Date**
Daniel Morton/Project Engineer	Electronic Approval on File	March 21st, 2013
Henrik Loos/Project Physicist	Electronic Approval on File	March 21st, 2013
Paul Montanez/SXRSS Lead Engineer	Electronic Approval on File	March 21st, 2013
Daniel Ratner/SXRSS Lead Physicist	Electronic Approval on File	March 21st, 2013
Jerome Hastings/FEL R&D Program Lead	Electronic Approval on File	March 21st, 2013

SLAC National Accelerator Laboratory, 2575 Sand Hill Road, Menlo Park, CA 94025

Work supported in part by US Department of Energy under contract DE-AC02-76SF00515.

Table of Contents

1 Overview ... 3

2 Applicable Documents, Acronyms, Specifications and Codes ... 3

2.1 Acronyms ... 4

2.2 Reference Documents ... 4

3 General Requirements ... 4

3.1 Location & Distribution ... 4

3.2 Space Constraints ... 5

3.3 Environment ... 6

3.4 Maintenance, Accessibility & Operations ... 6

4 Physics Requirements ... 6

5 Mechanical Requirements ... 6

5.1 Construction ... 6

5.2 BOD Card Assembly ... 7

5.3 Actuator Assembly ... 7

5.4 Optical Assembly ... 8

5.5 Alignment/Support Assembly ... 9

5.6 Materials ... 9

5.7 Vacuum ... 9

5.8 Alignment/Fiducialization ... 9

6 Interfaces ... 9

6.1 Mechanical ... 9

6.2 Vacuum ... 10

6.3 Controls ... 10

7 Environmental Safety and Health Requirements ... 10

7.1 Seismic ... 10

7.2 Radiation Physics ... 10

7.3 Pressure Vessel/Vacuum Vessel ... 10

7.4 Pinch Points ... 11

8 Quality Assurance, Inspection & Testing ... 11

9 Revision History ... 11

1 Overview

A Soft X-Ray Self Seeding device (see reference 3 for details) will be installed in the undulator hall of the LCLS, replacing undulator 9. A four dipole magnetic chicane will steer the electron beam aside and a grating monochromater will disturb the original X-ray beam path. The two beams must then be restored to the original SASE beam path and overlap with 10 micron precision. In order to overlap the beams, their position relative to each other must be known at two different points along the beamline. This will be accomplished using two diagnostics devices spaced approximately 10 meters apart. Each device will consist of a scintillator screen and a set of perpendicular carbon fibers. The scintillator screen, coupled with a CCD camera, will be used to locate the centroid of the X-rays. The carbon fibers, along with the existing BLM located downstream in the electron beam dump, will be used to locate the electron beam. To accurately position the scintillator screen and the carbon fibers, a card will be constructed similar to the one used for the BFW position monitors (see Figure 2). Once the position of both beams is known, overlap can be achieved.

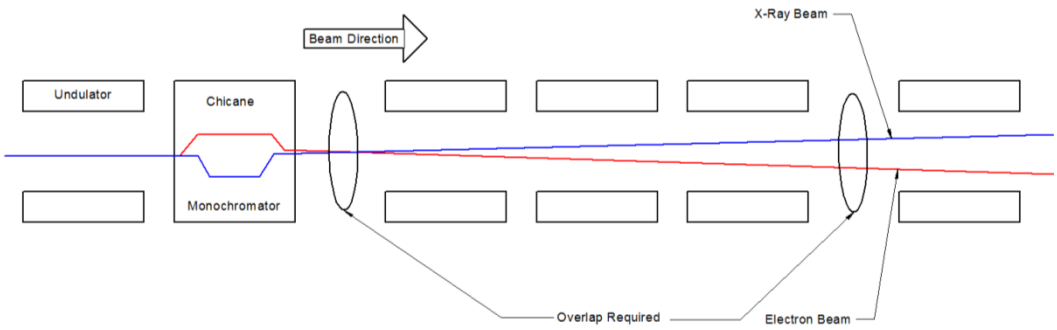

Figure 1: Beam Overlap Diagram

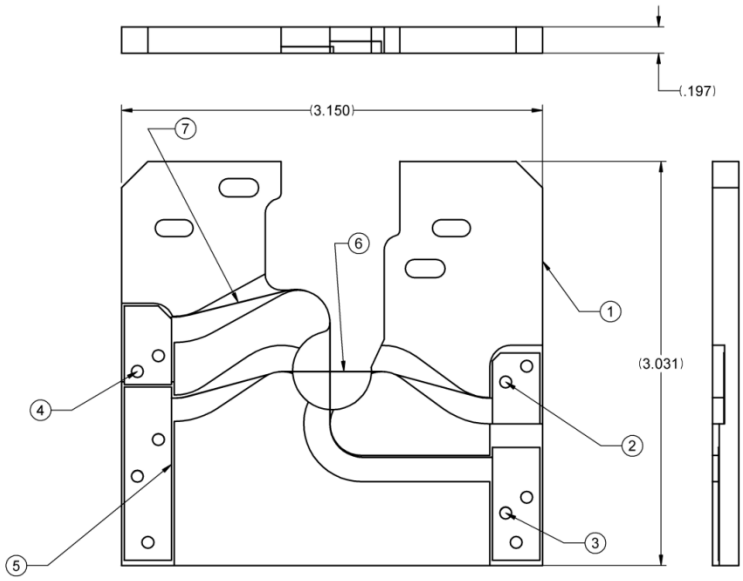

Figure 2: BFW Card: uses rounded fiducial surfaces to position 40 micron carbon fibers in cross hair configuaration (image taken from SLAC drawing SA-381-902-40).

2 Applicable Documents, Acronyms, Specifications and Codes

2.1 Acronyms

BFW	Beam Finder Wire
SXRSS	Soft X-Ray Self Seeding
BOD	Beam Overlap Diagnostic
MPS	Machine Protection System
UHV	Ultra-high Vacuum
Ce:YAG	Cerium-doped Yttrium Aluminium Garnet
SASE	Self Amplified Spontaneous Emission
CMM	Coordinate Measuring Machine
LCLS	Linac Coherent Light Source
BLM	Beam Loss Monitor

2.2 Reference Documents

1	**SLAC-I-720-0A24E-001-R003**	Seismic Design Specification for Buildings, Structures, Equipment, and Systems: 2011
2	**LCLS Room Data Sheet # 1.9-1010**	Undulator Hall Data Sheet
3	**SLAC-I-081-101-001-00**	LCLS Physics Specifications for the SXRSS Beam Overlap Diagnostics
4	**FP-202-631-14**	Fabrication of UHV Components
5	**SLAC-I-120-204-003-00**	LCLS Specifications and Guidelines for Level 2 Vacuum Qualification

3 General Requirements

3.1 Location & Distribution

The Beam Overlap Diagostics (BOD) must reside at two locations downstream of the SXRSS apparatus and must be separated by at least one gain length (approximately 3 meters). After examining Figure 3, the general lay out of the undulator hall, it becomes very apparent where the diagnostics will reside. Between each set of undulators is a small gap, or break. And every third break is a long break of approximately 20 inches. These long breaks are the only viable location for the diagnostics devices. The first two long breaks exist after undulator 9 and 12. The long break after undulator 9 is currently occupied by a pneumatic vacuum isolation valve, an all metal roughing valve, a piranni gauge and a cold cathode gauge. A 2.75” ConFlat flange must be provided for each of the aformentioned devices. The break after undulator 12 is currently occupied by drift tube, so that shall be replaced with the BOD. The spacing between the long breaks is approximately 12 meters, which satisfies the “overlap for one gain length” requirement stated in the PRD (reference 3).

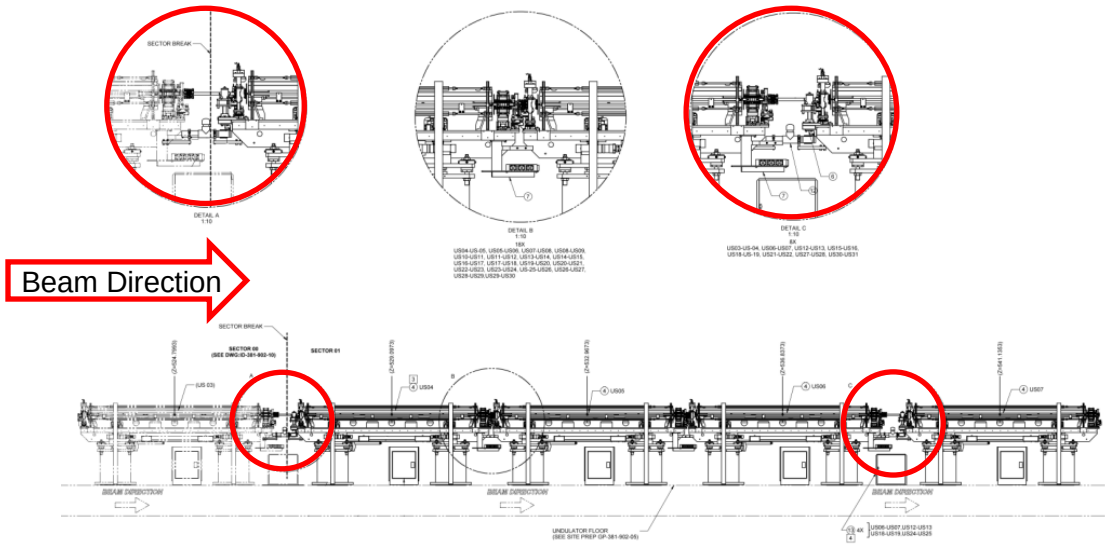

Figure 3: Undulator layout showing long breaks. The first break, on the left, is also a section break containing a gate valve (gate valve not shown in image).

3.2 Space Constraints

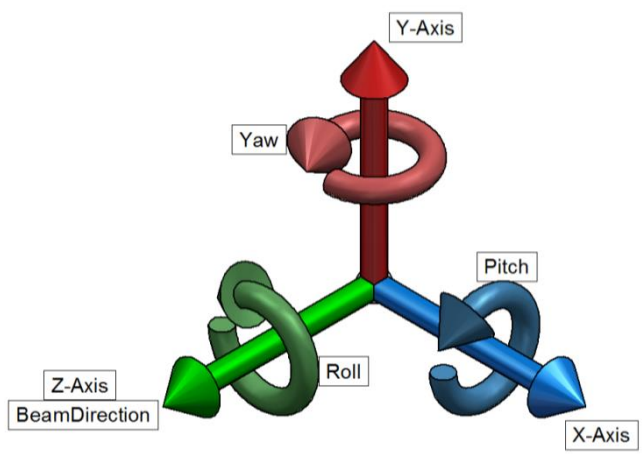

Figure 4: Coordinate system used throughout ESD.

Z-axis:

The design envelope in the Z-direction will be defined by the length of the long breaks. Since the break after undulator 9 is occupied by an isolation valve, the total Z-space will be reduced to approximately 11.3 inches. In order to implement the same design in both breaks we will design the device for the shorter break and insert a spool in the break after undulator 12.

Y-axis:

The +Y-direction is limited to approximately 41.5 inches by overhead cable trays. The -Y-direction is limited to approximately 14 inches a hydrostatic leveling devicewhich spans the length of the undulator hall.

X-axis:

The X-direction envelope shall be limited to the width of the girder, which is approximately 22 inches.

3.3 Environment

- Temperature: The beam overlap diagnostics will be installed in the temperature controlled undulator hall. The nominal temperature in the hall is 20°C with a maximum deviation of ±0.05°C.
- Vibration: The vibration levels in the undulator hall shall not exceed 1 micron RMS integrated over frequencies greater than 1 Hz (see reference 2).
- Radiation: The device will be exposed to levels of spontaneous synchrotron radiation on the order of 1 kilo-rad per week.
- Optical devices and viewports shall be covered to prevent dust from obstructing images. Viewports shall be covered for safety (see section 7.3).
- The BOD card paddle, card, mirror pedestal and mirror will be in an UHV environment.

3.4 Maintenance, Accessibility & Operations

The BOD card shall be accessable with minimal effort. Replacement of the carbon fibers will require the use of a fixture, tensioning weights and a soldering iron. Therefore two replacement cards will be wired and on hand at all times to facilitate timely replacement and to minimize downtime in the event of a broken wire.

4 Physics Requirements

Table 1: Alignment tolerances. Degrees of freedom are given relative to beamline coordinates, (Pitch, Yaw, Roll) are rotation about (X, Y, Z), where Z is positive along the beam axis, X is transverse to that and Y is in the vertical direction.

Parameter	**DOF**	**Value**	**Unit**
Target Position Reproducibility	Z	100	µm
	X, Y	10	µm
	Pitch	20	mrad
Actuator Motion Axis Accuracy	Roll, Yaw	10	mrad
Ce:YAG to wire cross relative position accuracy	Z	50	µm
	X	100	µm
Wire Perpendicularity		10	mrad
Wire Cross Position Accuracy	X, Y, Z	100	µm
	Pitch, Yaw	20	mrad
	Roll	10	mrad
Ce:YAG Crystal Position Accuracy	Y	500	µm
	X	100	µm
	Pitch, Yaw	20	mrad
	Roll	20	mrad
Annular Mirror Position Accuracy	X, Y	100	µm
	Z	1	mm
	Pitch, Roll, Yaw	20	mrad

5 Mechanical Requirements

5.1 Construction

The beam overlap diagnostics shall consists of four subsystems. The BOD Card assembly, the actuator assembly, the optical assembly and the positioning assembly. Each system is described in detail below.

5.2 BOD Card Assembly

The card assembly consists of a card that holds two carbon fibers, a scintillator screen and all hardware required to fix the wires and scintillator screen. The card shall be metallic as to prevent potential charge build up from the near by electron beam. The fibers shall be forty microns in diameter and arranged in a cross hair configuration with the horizontal wire used to determine the vertical position and the vertical wire used to determine its horizontal position of the electron beam. Rounded fiducial surfaces will be used to position the fibers; the radius of curvature of these surfaces will be kept to a 3/8 inch minimum to prevent excessive wire breakage during installation. The wires will be tensioned with 20-30 gram weights to ensure that there is no sagging. They will then be fixed to gold plated copper tabs with flux free solder. The tabs will be gold plated to prevent oxidation as the solder contains no flux to remove it. Ce:YAG was chosen as the scintillator material due to its high photon output of 18,000/MeV, emission wavelength of 550nm (which is well matched with CCD sensitivity), vacuum compatability and radiation hardness. The Ce:YAG screen will have unobstructed dimensions of 10x10mm which will be used to locate the X-ray beam. It will be sufficiently thin (.02mm) that accidental interaction with the electron beam will create minimal radiation. The card will have a beam stay clear of no less than 8mm in diameter, which will be on the beam axis when the BOD is not in use.

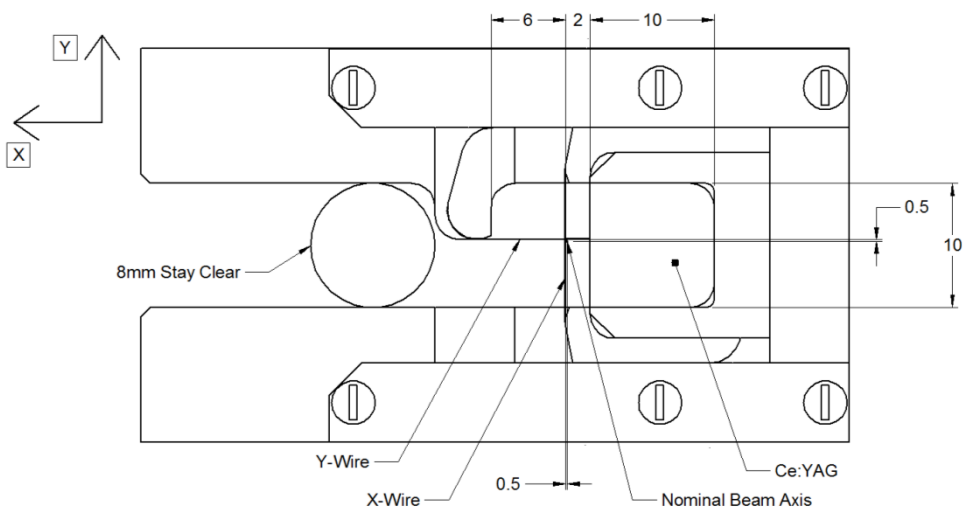

Figure 5: BOD Card fiber/Ce:YAG layout (all dimensions in mm). The beam axis indicated, is the nominal beam position while the overlap diagnostic is in use. Beam direction is into page (along +Z-axis). Motion is along X-axis.

5.3 Actuator Assembly

The card assembly will be mounted on a paddle at the end of an actuator assembly which will position the device in the path of the X-ray and electron beams. The device will translate along

the X-axis, to match the chicane layout, and will be inserted from the aisle side of the undulator. When the BOD is not is use (SASE operation), it will be fully inserted. This prevents the possibility of the vacuum load retracting the actuator in the instance of motor failure. The card position is required to be repeatable within 10 microns in the X-direction. This can be achieved with an acme or ball screw actuator with a stepper motor and a linear encoder used with a closed feedback loop. The card will be fixed in the Y and Z directions. The stability must be adequate to keep the Ce:YAG screen within the depth of focus of the CCD (a few hundred microns), therefore the rigidity of the card paddle is crucial. Limit switches will be used to limit the motion of the actuator (prevent overtravel) and as MPS. Three switches will be implemented in each BOD. The first switch will be the near limit, it will be activated when the card is fully inserted and will permit SASE operation. The second switch will activate over the range of operation of the diagnostic device. If neither of the first two switches are activated beam will not be permitted. The last switch will act as the far limit (actuator fully retracted) and will prevent overtravel. See Figure 5.

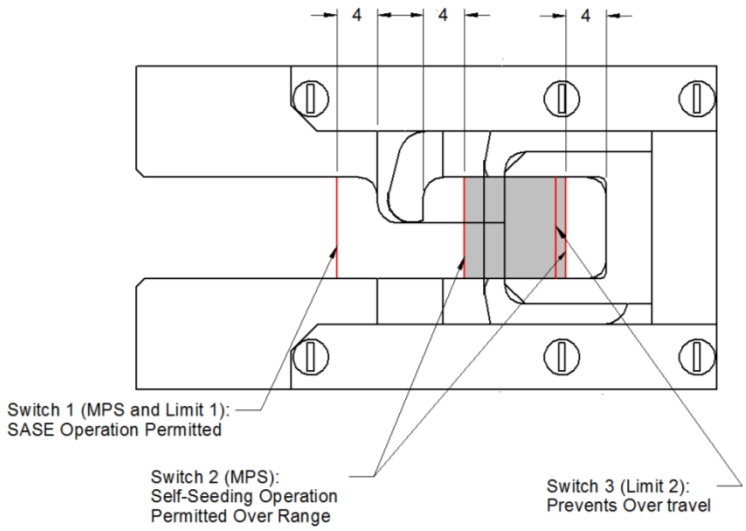

Figure 6: Diagram of BOD card showing activation point/region for each switch. Note: 4mm radius stay-clear must be met for both SASE and self-seeding operation. Note: Switch 3 will be activated before switch 2 is deactivated to prevent the MPS from being tripped and consequently, the beam from being shut off.

5.4 Optical Assembly

The Ce:YAG screen shall be imaged by a CCD camera. In order to obtain the desired viewing geometry a mirror will be located in vacuum upstream from the Ce:YAG screen (see Figure 6). The mirror shall be an annulus to allow both beams to pass through unobstructed. The mirror will be mounted to a port aligner for initial alignment. The camera shall be mounted on a tilt and rotation platform to allow for fine adjustments in pitch and yaw. The platform will then be mounted to a slotted rail to allow for rough positioning along the Y-axis. A remote operated light source must be positioned in a manner to illuminate the carbon fibers for viewing.

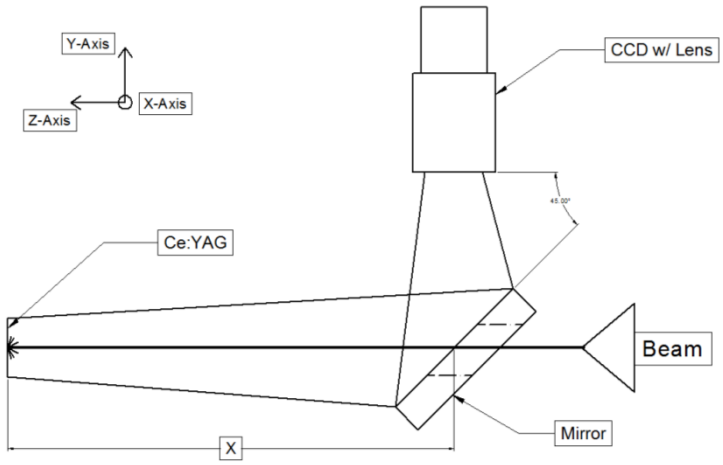

Figure 7: Optical Layout. The X-dimension is to be >55mm to avoid vingetting.

5.5 Alignment/Support Assembly

The BOD will be mounted to the girder upstream of the long break. An extension plate must be employed to provide adequate mounting space. This extension plate shall then have all required adjustments that are not available on the mirror and card's independent alignment mechanisms.

5.6 Materials

All in-vacuum components will be fabricated from 6061-T6 Aluminum, 316 stainless steel, OFHC Copper or 99.999% Alumina. Material certification are to be provided by vendors for all UHV parts. Solder for fixing the carbon fibers to the card is to be flux free. See references 4 & 5 for a more exhaustive list of material requirements for UHV components.

5.7 Vacuum

The BOD card shall reside in a 10^{-9} Torr pressure environment. Care will be taken to provide ventailiation for all potential trapped volumes as to prevent virtual leaks. All in vacuum components will be baked and RGA scanned prior to installation in the undulator hall. All in vacuum components are to adhere to references 4 & 5.

5.8 Alignment/Fiducialization

1. An optical comparator will be used to measure card geometry; especially carbon wires and Ce:YAG edges, with respect to indexing features on the card. See section 8.
2. A CMM will be used to locate indexing pins on card paddle with respect to tooling ball sockets on paddle flange.
3. The card shall then be installed on the paddle.
    a. Pins allow for repeatable alignment.
    b. Wire and Ce:YAG positions should then be verified using an optical comparator.
4. Tooling balls will then be used to align the card (on paddle) to chamber axis.
5. Tooling balls and a port aligner will be used to aligned the mirror to the beam axis.

6 Interfaces

6.1 Mechanical

A girder extension plate will be the interface between the BOD and the girder.

6.2 Vacuum

The diagnostics chamber will interface with a NW50 EVAC CeFIX ® flange on bellows at the upstream end and a rigid NW50 EVAC CeFIX ® flange at the downstream end. Three 2.75" ConFlat (CF) flanges will be provided to accommodate for an existing roughing valve and vacuum diagnostics at the break after undulator 9. Undulator 12 will require a CF 2.75" spool to span the distance that is occupied by the gate valve in the undulator 9 break.

6.3 Controls

All components will be chosen with ease of integration into the control system being a top priority.

6.3.1 Motion Control

Motorized motion of the actuator is required to be remotely controlled via the corresponding control system.

6.3.1.1 Feedback/Encoders

A linear encoder will be used to measure the actuator position. Limit switches will be used to limit the motion of the actuator, to prevent accidental collision of components and as a machine protection system (further explained in section 6.3.4).

6.3.1.2 Imaging

A CCD camera will be used to image the Ce:YAG screen. Also, compatable LED light source will be used to illuminate carbon fibers.

6.3.1.3 Machine Protection

Limit switches will be used to define beam "On" and "Off" positions. When the actuator is fully inserted it will activate a switch and permit beam. If the actuator is retracted to the "Card-In" position, beam will be permitted. If the actuator is inserted, but has not activated the "In" switch, beam will not be permitted.

7 Environmental Safety and Health Requirements

7.1 Seismic

This device does not meet the minimum criteria to require seismic analysis as per SLAC guidelines (references 1 Section 1.4 Nonstructural Components). Care should be taken to reexamine the existing undulator girders that the BOD will be mounted to, to assure that the weight threshold will not be exceeded and analysis is not required.

7.2 Radiation Physics

No additional radiation shielding will be required since the device will be located in a radiation controlled area.

7.3 Pressure Vessel/Vacuum Vessel

The diagnostics chamber will be designed for UHV loading. There is a risk of implosion due to imperfections or defects in components. Also, during purge there is risk of explosion from positive pressure in the system. To mitigate these risks shields will be placed over all viewports.

7.4 Pinch Points

PPS covers will be installed around actuator to mitigate the risk of injury from pinch points.

8 Quality Assurance, Inspection & Testing

Each card will be dimensionally verified prior to installation. Vendors will be responsible for providing material certifications and dimensional verification for all custom parts. Any out of spec component will be sent back to the vendor. Finals dimensions will be noted and minor deviations will be compensated for during alignment. The Q.A. data will be stored in a database for historical reference. Benchtop alignment will be done in vacuum and then the device will be transferred to the undulator hall for installation and final alignment. The motor, encoder, limit/MPS switches, camera and illuminator will all be bench top tested to assure proper function.

9 Revision History

Revision	Date Released	Description of Change
R0		Initial Release