SLAC-PUB-9805
May 2003

EXPERIMENTAL MEASUREMENTS OF THE ORION PHOTOINJECTOR DRIVE LASER OSCILLATOR SUBSYSTEM*

Dennis T. Palmer, Ron Akre (SLAC), Stanford, CA, USA

Abstract

Timing jitter measurements have been conducted on the ORION photoinjector laser oscillator pulse train output with respect to a ultra low noise crystal rf oscillator running at 79 1/3 MHz, the 36th harmonic of S-Band. The ORION laser oscillator subsystem consists of a Spectra-Physics Tsunami ultra-fast tunable (750 – 850nm) laser pumped by a Diode pumped Spectra-Physics Millennia VsP 5W. Overall laser oscillator subsystem performance will be presented. These measurements consist of the laser oscillator generated noise and transfer function from the RF reference input of the laser to an external photodiode RF output. Timing jitter measurements of less than 500 fsec have been attained with the laser oscillator tuned to 800 nm. .

ORION LASER RF REQUIREMENTS

The ORION facility will use an S-Band photoinjector to inject into the X-Band accelerator at the NLCTA facility. The upgraded photoinjector will replace the present thermionic DC gun, this upgrade will allow for the use of the NLCTA as an Advanced Accelerator User Facility. The electron beam has the following beam characteristics: 0 – 1 nC, the transverse emittance at 0.25 nC has been simulated to be $\leq 2\times10^{-6}$ π mm mrad, and a beam energy of 67 MeV. The drive laser system is a commercial Ti:Sapphire 266 nm wavelength, 1 mJ output laser power. The stability requirement for the electron beam with respect to the RF is 500fS rms for the ORION[1] and the LCLS[2] projects.

The RF source used for the laser will be derived from the Main Drive Line (MDL) RF at SLAC. The timing system at SLAC is locked to a 1nS width fiducial pulse at 360Hz. This monopolar pulse is locked to, and transmitted with, the 476MHz RF on the MDL and causes a double height half cycle pulse which triggers counters. The 476MHz RF on the MDL is also used for PEP and is shifted in frequency and phase so the main linac can fill different buckets in PEP, figure 1.

Not only does the phase shifting cause a problem, but the phase noise of the RF at the ORION facility is to large to achieve timing jitter of less than 500fS rms. A phase locked oscillator must be used to reduce the phase noise and provide a stable signal for the laser to lock to, a signal which is also locked to the RF used by the existing timing system uses. Both the phase noise and transfer function of the laser oscillator are critical in understanding the RF to laser output timing jitter.

*Supported by the U.S. Department of Energy, contract DE-AC03-76SF00515: PAC2003 WPAB028: SLAC-PUB-9805

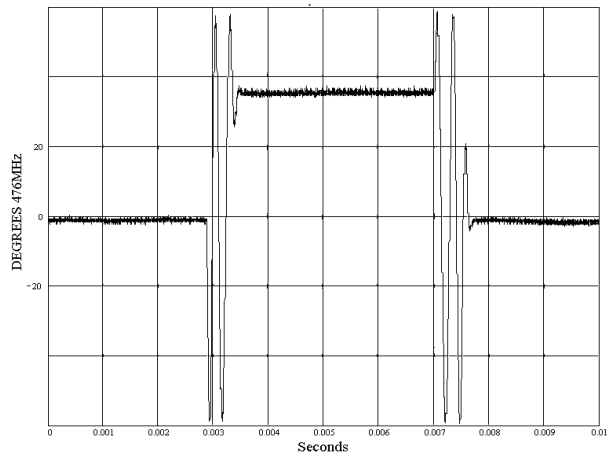

Figure 1: MDL Phase with phase shifts to fill buckets in the PEP storage rings.

PHASE NOISE MEASUREMENTS

Phase Noise Measurement System

The phase noise measurement system is shown in figure 2. An external photodiode detector was used to measure the phase noise of the Tsunami laser. A 79.3MHz Ultra Low Noise Oscillator was used as a reference oscillator for the laser. The same oscillator was used to power the LO of a mixer after being multiplied to 476MHz. A signal from a photodiode at the laser output was multiplied to 476MHz and used to drive the RF mixer port. The IF mixer port is amplified by 50dB, filtered, and digitized by a PC PCI scope card. The data are then collected at 40kHz and 20MHz. A 10kHz filter is used for collecting data at 40kHz and a 5MHz filter is used for collecting data at 20MHz. The 79.3MHz oscillator, multipliers, and low noise amplifiers were run off batteries to reduce the noise floor.

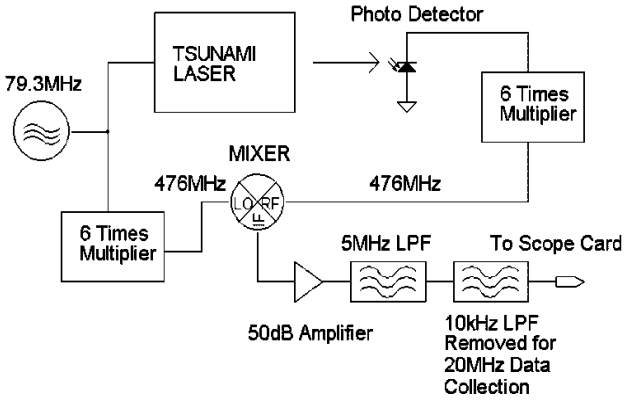

Figure 2: Phase Noise Measurement System.

Stanford Linear Accelerator Center, Stanford, California, 94309
Contributed to Particle Accelerator Conference, Portland, Oregon, May 12-16, 2003

Phase Noise Data

Phase noise data taken with the above system is seen in figures 3 and 4 with data sample rates of 40kHz and 20MHz respectively. The Resolution Band-Width, RBW, is listed below the frequency spectrums and is the frequency bandwidth the noise power is measured over.

The integrated phase noise plots, figures 5 and 6, are an integral from the frequency listed on the x axis to the Nyquist frequency of either 20kHz or 10MHz. The integration takes out much of the fluctuations of the fft, allowing one to see the frequencies which contribute most to the total noise. Since each point is an integral from an upper limit to the lower limit, the lower limit given by the horizontal axis, one can see how high in frequency a feedback system must go in order to reduce jitter to a value as read from the vertical axis.

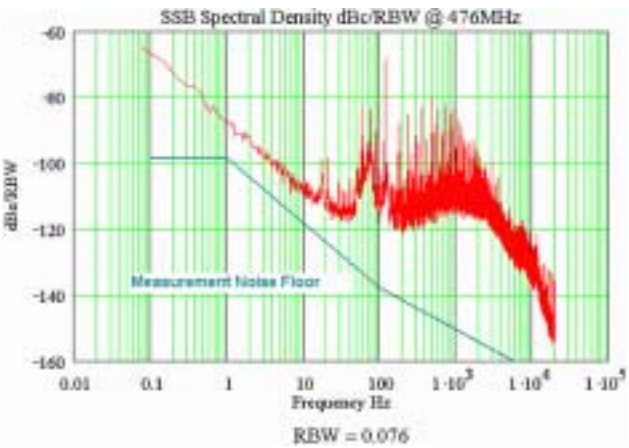

Figure 3: Laser Oscillator Noise Spectrum (40kHz)

Figure 4: Laser Oscillator Noise Spectrum (20MHz)

Since jitter is the integral of noise, a system required to meet a jitter specification can only do so up to a certain frequency or band-width. The noise floor of the system will determine the maximum band-width for a given jitter level. To look at the effect on high frequency noise, we take a closer look at the noise floor of figure 4. The following numbers are from integration over the selected ranges of the data shown in figure 4.

Integration Range From Carrier	Noise Level Down From Carrier
1Mhz to 2MHz	9.2e-10
2MHz to 3MHz	8.9e-10
3MHz to 4MHz	6.5e-10
4MHz to 5MHz	5.5e-10

The 5MHz low pass filter used to collect this data will cause the noise level to be 1dB lower at 5MHz and has a –3dB cutoff at 6MHz. From this data a conservative estimate of the noise floor is –90dBc/MHz. The timing jitter from this noise floor integrated out to 40MHz, 40X=16dB, would be –74dBc at 476MHz, or 69fS. The high frequency noise floor is not a significant source of jitter.

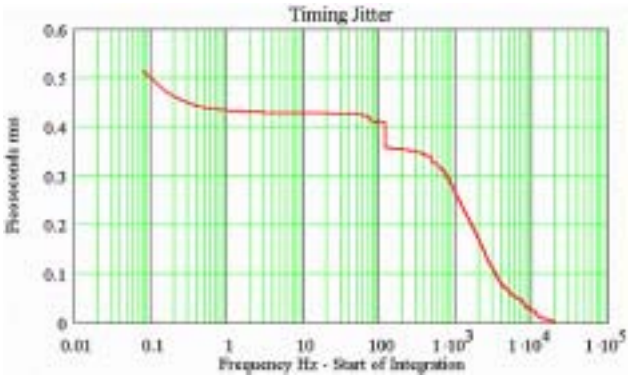

Figure 5: Integrated Noise Spectrum (40kHz)

The major contribution to jitter is a broad spectrum of noise from about 800Hz to about 3KHz. The noise source, which contributes the next highest amount to the jitter, is the sharp peak at 120Hz figures 3 and 5. Next in line would be the broad peak at about 400kHz, figures 4 and 6.

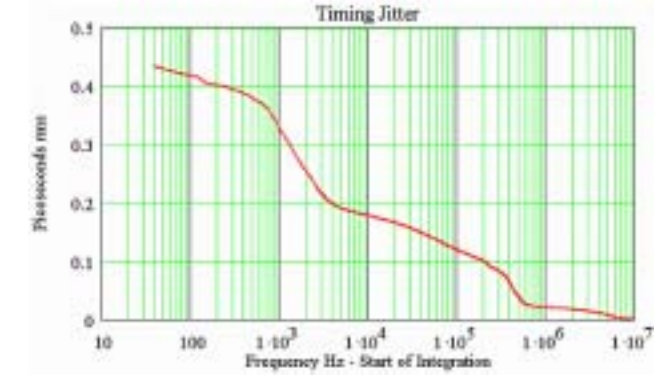

Figure 6: Integrated Noise Spectrum (20MHz)

From figure 5, the integrated noise from 1Hz to 10kHz is about 430fS. From figure 6, the integrated noise from 10kHz to 1Mhz is about 180fS. If we add up these two noise levels from 1Hz to 1MHz and add to that the 69fS from 1MHz to 40MHz, **the total integrated noise level from 1Hz to 40MHz is less than 480fS. This is the rms jitter at the laser oscillator output with respect to the input RF.**

TRANSFER FUNCTION MEASUREMENTS

A low frequency network analyzer was used to measure the transfer function from the locking input of the laser oscillator to the output of an external photodiode. The setup is shown in figure 7.

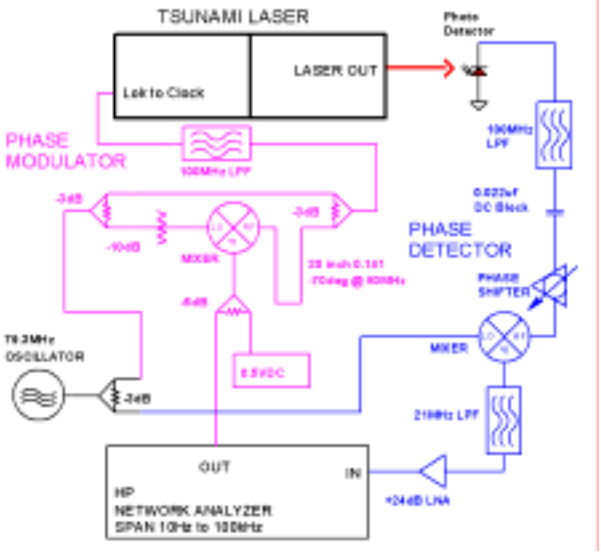

Figure 7: Transfer Function Measurement Test Setup.

The system was calibrated by connecting the cable from the Lok to Clock box input to the cable connected to the Photo Detector output. This bypassed the Tsunami Laser and the Photo Detector. The phase shifter was adjusted to zero the mixer IF output and the network analyzer normalized.

The output of the Phase Modulator was then connected to an HP8562A Spectrum Analyzer. The Network Analyzer output was set to an amplitude of 20mV and the Spectrum Analyzer showed sidebands at -63dBc.

The Phase Modulator output was then connected to the input of the Tsunami Laser Lok to Clock box. The Network Analyzer was set to 1kHz CW. The Photo Detector signal, before the RF port of the mixer was measured with the Spectrum Analyzer. The 1kHz sidebands were -60dBc which is consistent with the shape of the transfer function.

The calibration does not take out a gain offset in the system but 0dB gain is the level of the signal below 100Hz, as the output of the laser tracks the input very closely in this region.

The gain and phase data taken are shown in figure 8. The gain and phase are flat to about 1.5kHz. What looks like a resonance causes the gain to peak at about 3kHz and the phase to change by –90° from 1.5kHz to 4kHz. Beyond 10kHz the phase changes further which could cause a simple external feedback system with gain beyond 10kHz to go unstable.

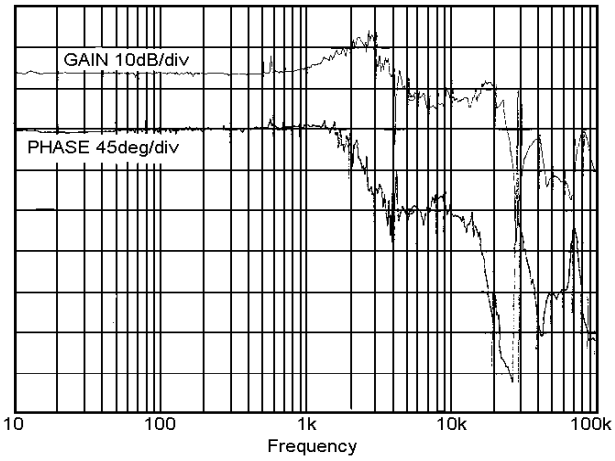

Figure 8: Transfer Function Data.

COMMENTS

The 120Hz peak in the noise, figures 3 and 5, has a magnitude of about 200fS. There could be many sources for this noise, likely sources would be DC power supplies for the electronics or pump laser. Since ORION and LCLS will be running at 120Hz or a sub-harmonic, this noise may not even be detected in the system.

The above transfer functions, figure 8, shows that a simple external feedback system could be used to control the phase if it has a cutoff frequency of about 1kHz. From the phase noise plots one might expect the jitter to be reduced by about 100fS with such a feedback. The total jitter in this case would be below 380fS.

By tuning the laser locking feedback and adding external feedback, one might be able to push the feedback limit to about 3kHz. A 3kHz feedback system might reduce the jitter level to about 240fS. To get much further below this level, noise floors in the electronics would have to be reduced and/or locking done at a harmonic of the laser frequency to further reduce noise levels.

The laser oscillator stability, as is, meets the requirements for the LCLS and ORION projects. At this time, work to further reduce the stability of the laser does not have a high priority.

ACKNOWLEDGEMENTS

The authors would like to thank Ben Cowan for his assistance in setup and operating the laser system. In addition, we are indebted to Spectra Physics Corp for providing engineering support for this work. The authors would also like to thank Bob Siemann and Eric Colby for their support of this work.

REFERENCES

[1] ORION Research Facility Technical Design Study, April 12, 2002, available at the ORION website http://www-project.slac.stanford.edu/orion/

[2] LCLS Design Study Report, SLAC-R-521 (1998) http://www-ssrl.slac.stanford.edu/lcls/